Cambridge Assessment International Education

Cambridge International AS & A Level

CANDIDATE NAME									
CENTRE NUMBER						CANDIDATE NUMBER				

0123456789

PHYSICS **9702/05**

Paper 5 Planning, Analysis and Evaluation **For examination from 2022**

SPECIMEN PAPER **1 hour 15 minutes**

You must answer on the question paper.

No additional materials are needed.

INSTRUCTIONS

- Answer **all** questions.
- Use a black or dark blue pen. You may use an HB pencil for any diagrams or graphs.
- Write your name, centre number and candidate number in the boxes at the top of the page.
- Write your answer to each question in the space provided.
- Do **not** use an erasable pen or correction fluid.
- Do **not** write on any bar codes.
- You may use a calculator.
- You should show all your working and use appropriate units.

INFORMATION

- The total mark for this paper is 30.
- The number of marks for each question or part question is shown in brackets [ ].

This document has **8** pages. Blank pages are indicated.

© UCLES 2019

1 A circular coil P carrying an alternating current produces a changing magnetic field. When a second similar coil Q is placed with its centre a distance x from the centre of coil P, as shown in Fig. 1.1, an electromotive force (e.m.f.) E is induced in coil Q.

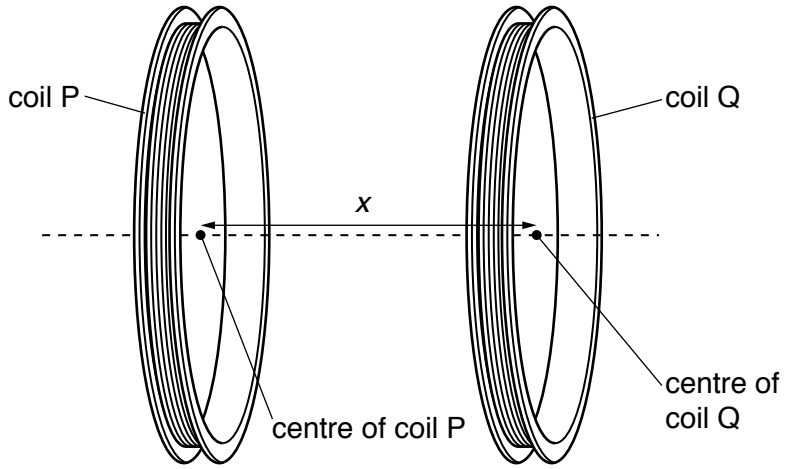

Fig. 1.1

It is suggested that E is related to x by the relationship

$$E = IZe^{-kx}$$

where I is the current in coil P, and k and Z are constants.

Plan a laboratory experiment to test the relationship between E and x.

Draw a diagram showing the arrangement of your equipment.

Explain how the results could be used to determine values for k and Z.

In your plan you should include:

- the procedure to be followed
- the measurements to be taken
- the control of variables
- the analysis of the data
- any safety precautions to be taken.

© UCLES 2019

Diagram

.....

.....

.....

.....

.....

.....

.....

.....

.....

.....

.....

.....

.....

.....

.....

.....

.....

.....

2 A student investigates the potential difference in a circuit. The circuit is set up as shown in Fig. 2.1.

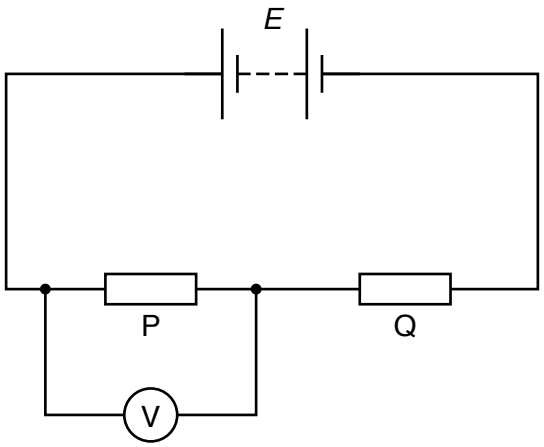

Fig. 2.1

Two resistors P and Q are connected in series to a power supply of electromotive force (e.m.f.) E and negligible internal resistance. Resistor P has resistance P.

The potential difference V across resistor P is measured. The experiment is repeated for different values of P.

It is suggested that V and P are related by the equation

$$V = \left(\frac{P}{P+Q}\right)E$$

where Q is the resistance of resistor Q. The value of Q is kept constant.

(a) A graph is plotted of $\frac{1}{V}$ on the y-axis against $\frac{1}{P}$ on the x-axis.

Determine expressions for the gradient and the y-intercept.

gradient = ...

y-intercept = ...

[1]

(b) Values of P, V and $\frac{1}{V}$ are given in Table 2.1.

Table 2.1

P / Ω	V / V	$\frac{1}{P}$ / $10^{-3}\,\Omega^{-1}$	$\frac{1}{V}$ / V^{-1}
250	0.66		1.52
330	0.86		1.16
470	1.15		0.870
560	1.30		0.769
680	1.49		0.671
840	1.64		0.610

Each value of P has an uncertainty of ±10%.

Calculate and record values of $\frac{1}{P}$ / $10^{-3}\,\Omega^{-1}$ in Table 2.1.

Include the absolute uncertainties in $\frac{1}{P}$. [2]

(c) **(i)** Plot a graph of $\frac{1}{V}$ / V^{-1} against $\frac{1}{P}$ / $10^{-3}\,\Omega^{-1}$.

Include error bars for $\frac{1}{P}$. [2]

(ii) Draw the straight line of best fit and a worst acceptable straight line on your graph. Label both lines. [2]

(iii) Determine the gradient of the line of best fit. Include the absolute uncertainty in your answer.

gradient = ... [2]

© UCLES 2019

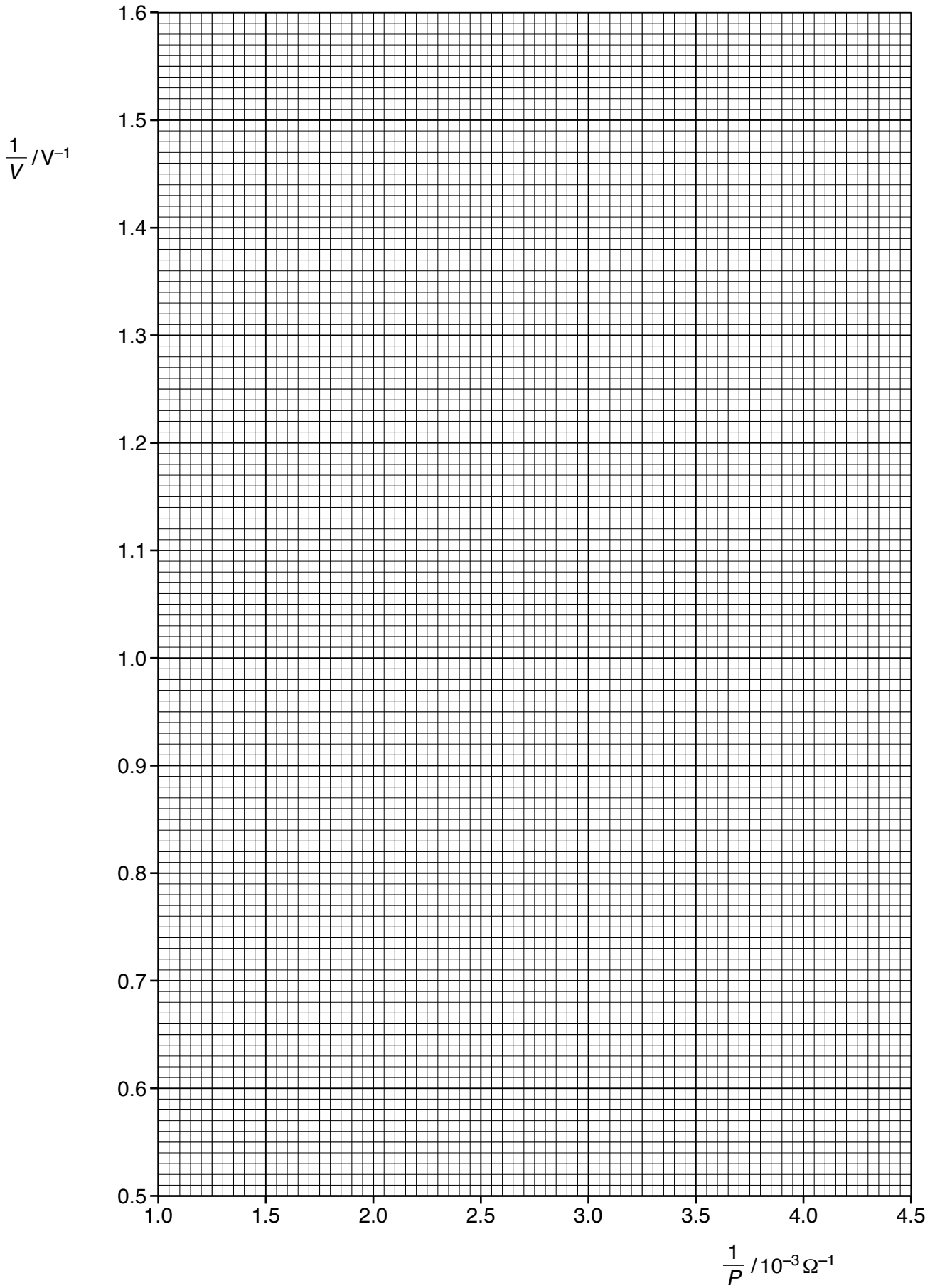
1.6
1.5
1.4
1.3
1.2
1.1
1.0
0.9
0.8
0.7
0.6
0.5
1/V / V⁻¹
1.0
1.5
2.0
2.5
3.0
3.5
4.0
4.5
1/P / 10⁻³ Ω⁻¹

(iv) Determine the *y*-intercept of the line of best fit. Include the absolute uncertainty in your answer.

y-intercept = ... [2]

(d) (i) Using your answers to **(a)**, **(c)(iii)** and **(c)(iv)**, determine the values of *E* and *Q*. Include appropriate units.

E = ...

Q = ...
[2]

(ii) Determine the percentage uncertainty in *E*.

percentage uncertainty in *E* = ...% [1]

(iii) Determine the absolute uncertainty in *Q*.

absolute uncertainty in *Q* = ... [1]
[Total: 15]

Permission to reproduce items where third-party owned material protected by copyright is included has been sought and cleared where possible. Every reasonable effort has been made by the publisher (UCLES) to trace copyright holders, but if any items requiring clearance have unwittingly been included, the publisher will be pleased to make amends at the earliest possible opportunity.

Cambridge Assessment International Education is part of the Cambridge Assessment Group. Cambridge Assessment is the brand name of the University of Cambridge Local Examinations Syndicate (UCLES), which itself is a department of the University of Cambridge.